Headlight with high intensity gas discharge lamp and automatic headlight adjuster

From 2004 m. y.

Main fuse

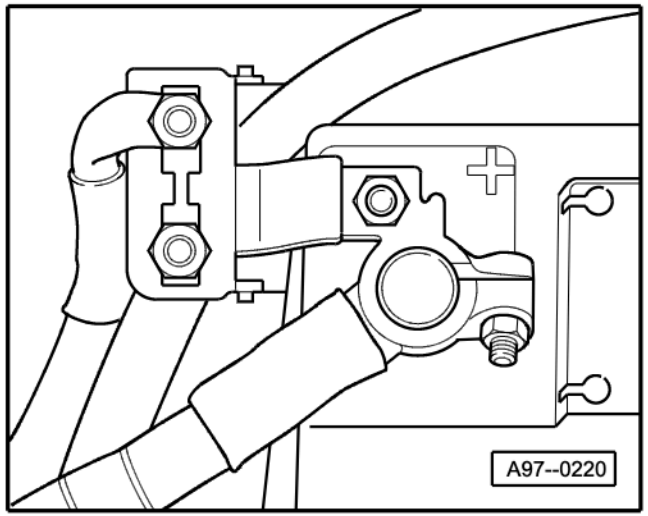

- on the Battery

Fuse holder

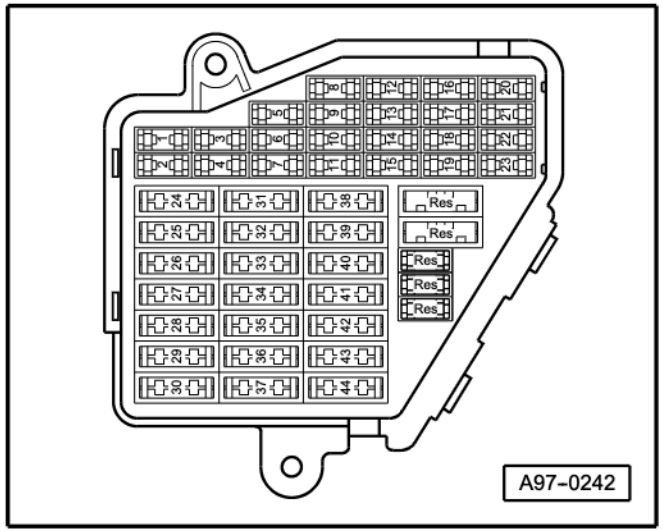

Protected by copyright. Copying for private or commercial purposes, in part or in whole, is not permitted unless authorised by AUDI AG. AUDI AG does not guarantee or accept any liability with respect to the correctness of information in this document. Copyright by AUDI AG.

- Instrument panel driver side

Fuse Colors
30 A - Green
25 A - Withe
20 A - Yellow
15 A - Blue
10 A - Red
7,5 A - Brown
5 A - Beige

Note:

- *Fuse in fusebox from 23 onwards are numbered 223 onwards in Current Flow Diagram.*

Coupling station with threaded connection

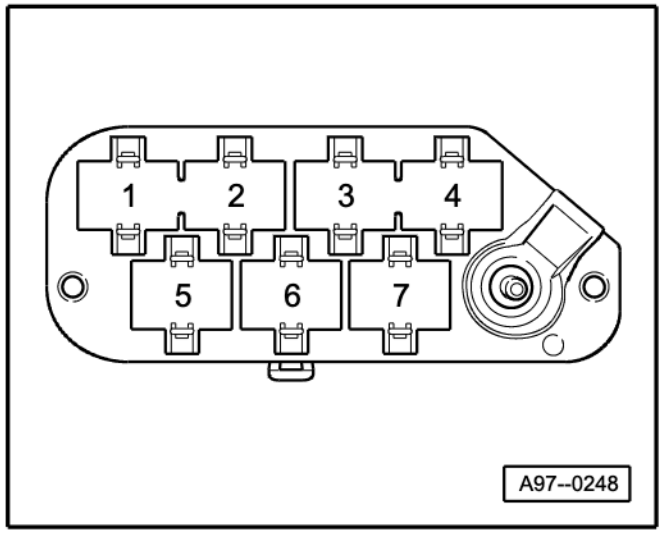

Protected by copyright. Copying for private or commercial purposes, in part or in whole, is not permitted unless authorised by AUDI AG. AUDI AG does not guarantee or accept any liability with respect to the correctness of information in this document. Copyright by AUDI AG.

- in the electronics box, plenum chamber

1 - 10-Pin Connector, black (T10)

Connector station A-pillar

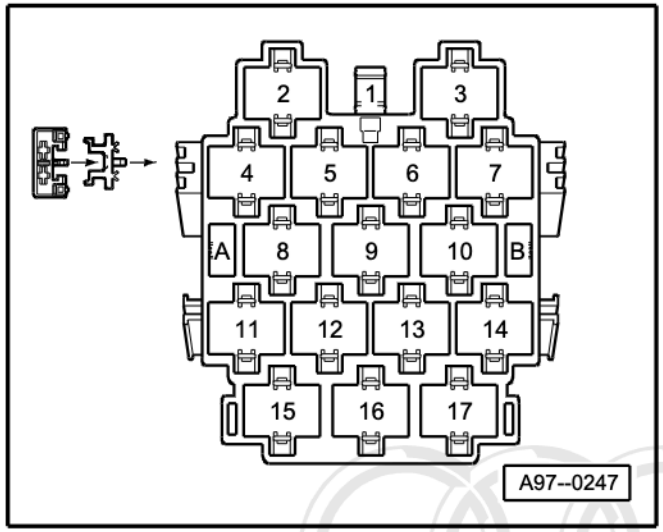

♦ behind side trim, left

16 - 17-Pin Connector, red (T17a)
17 - 17-Pin Connector, black (T17)

Connector station A-pillar

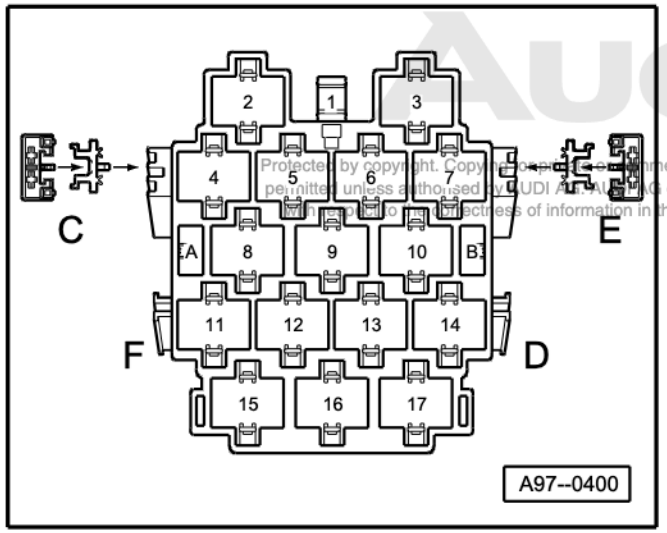

Protected by copyright. Copying for private or commercial purposes, in part or in whole, is not permitted unless authorised by AUDI AG. AUDI AG does not guarantee or accept any liability with respect to the correctness of information in this document. Copyright by AUDI AG.

♦ behind side trim, right

15 - 17-Pin Connector, red (T17c)

4-Pin Relay Carrier with threaded connection

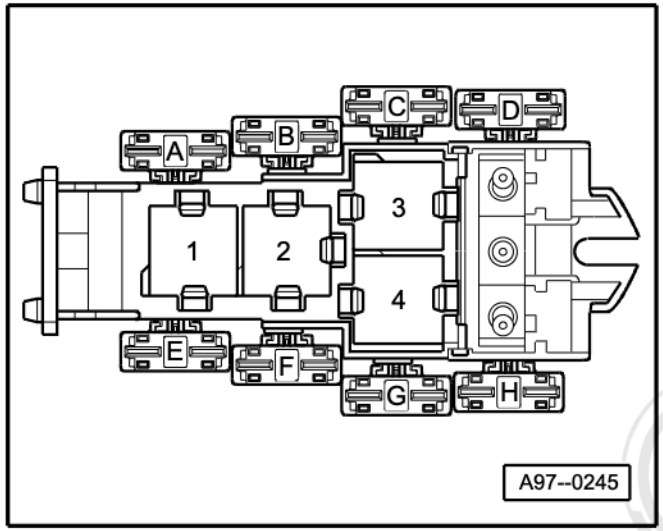

- Instrument panel driver side

Protected by copyright. Copying for private or commercial purposes, in part or in whole, is not permitted unless authorised by AUDI AG. AUDI AG does not guarantee or accept any liability with respect to the correctness of information in this document. Copyright by AUDI AG.

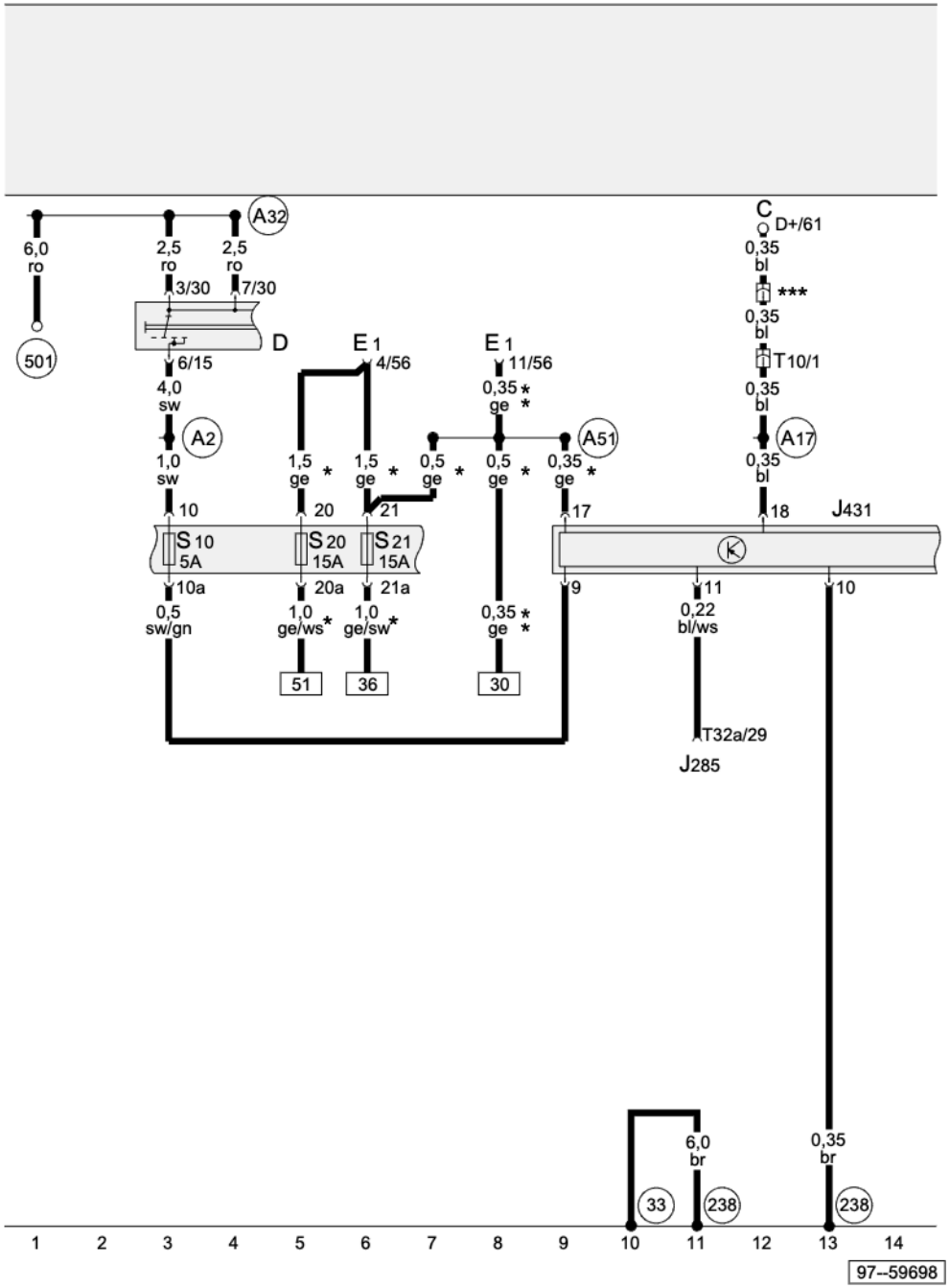

Headlight Range Control Module, Ignition/Starter Switch, Fuses

C	Generator (GEN)
D	Ignition/Starter Switch
E1	Light switch
J285	Control module with indicator unit in instrument panel insert
J431	Headlight Range Control Module
S10	Fuse in fuse holder/relay panel
S20	Fuse in fuse holder/relay panel
S21	Fuse in fuse holder/relay panel
T10	10-Pin Connector, black, connector station E-box, plenum chamber
T32a	32-Pin Connector, green, on instrument panel insert
33	Ground connection, behind instrument panel, right
238	Ground connection -1-, in wiring harness interior
501	Threaded connection -2- (30), on the relay plate
A2	Plus connection (15), in instrument panel wiring harness
A17	Wire connection (61), in instrument panel wiring harness
A32	Plus connection (30), in instrument panel wiring harness
A51	Wire connection (56), in instrument panel wiring harness
Q	Lowline equipment only
QQ	Highline equipment only
QQQ	⇒ Current wiring diagram for engine

Protected by copyright. Copying for private or commercial purposes, in part or in whole, is not permitted unless authorised by AUDI AG. AUDI AG does not guarantee or accept any liability with respect to the correctness of information in this document. Copyright by AUDI AG.

ws	=	white
sw	=	black
ro	=	red
br	=	brown
gn	=	green
bl	=	blue
gr	=	grey
li	=	lilac
ge	=	yellow
or	=	orange
rs	=	pink

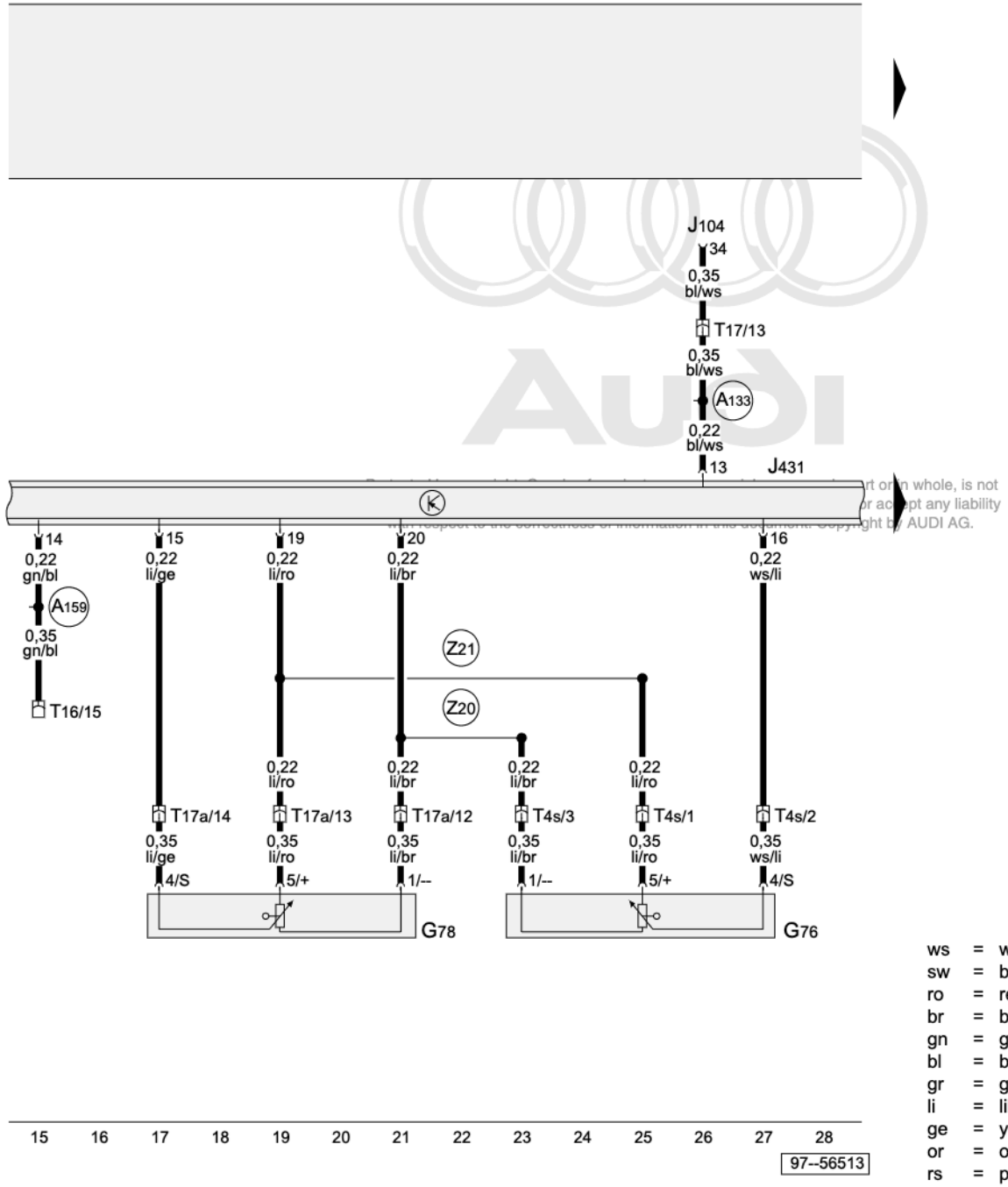

Headlight Range Control Module, Level Control System Sensors

G76	Left Rear Level Control System Sensor
G78	Left Front Level Control System Sensor
J104	ABS Control Module (w/EDL)
J431	Headlight Range Control Module
T4s	4-Pin Connector, black, for left rear Level Control System Sensor
T16	16-Pin Connector, black, diagnostic connection
T17	17-Pin Connector, black, connector station A-pillar, left
T17a	17-Pin Connector, red, connector station A-pillar, left
A133	Left ABS Impulse Connection (in instrument panel wiring harness)
A159	Wire connection (L), in instrument panel wiring harness
Z20	Wire connection, in self-leveling wiring harness
Z21	Plus connection (x), in self-leveling wiring harness

ws	=	white
sw	=	black
ro	=	red
br	=	brown
gn	=	green
bl	=	blue
gr	=	grey
li	=	lilac
ge	=	yellow
or	=	orange
rs	=	pink

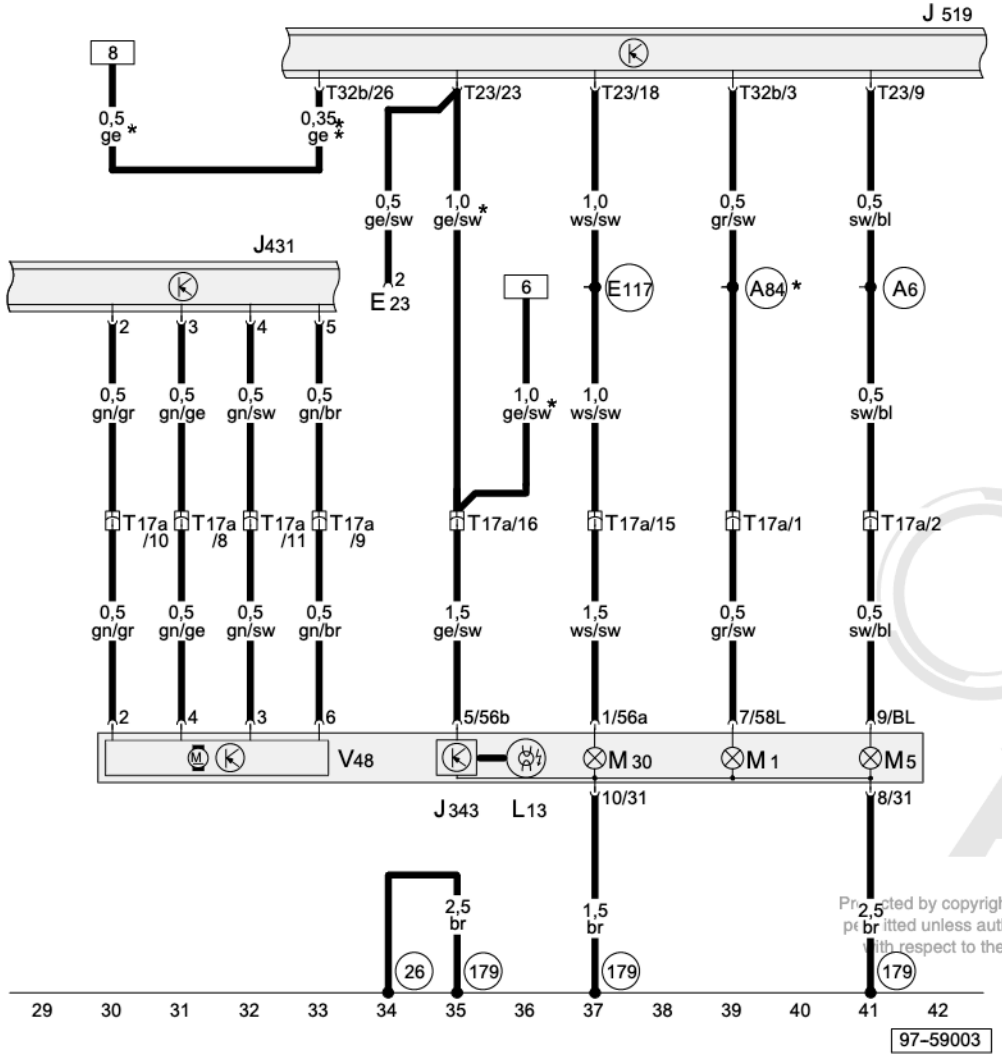

Headlight Range Control Module, High intensity gas discharge lamp, Left Headlight Beam Adjusting Motor

E23	Fog Light Switch
J343	Control Module for High-intensity gas discharge lamp
J431	Headlight Range Control Module
J519	Vehicle Electrical System Control Module
L13	High intensity gas discharge lamp
M1	Left Parking Light
M5	Left Front Turn Signal Light
M30	Left High Beam Headlight
T17a	17-Pin Connector, red, connector station A-pillar, left
T23	23-Pin Connector, black, on vehicle Electrical System Control Module
T32b	32-Pin Connector, grey, on vehicle Electrical System Control Module
V48	Left Headlight Beam Adjusting Motor
26	Ground connection, on front apron
179	Ground connection, in left headlight wiring harness
A6	Plus connection (left turn signal), in instrument panel wiring harness
A84	Connector (58L) in Instrument panel wiring harness
E117	Connector (56a, left), in instrument panel wiring harness
*	Lowline equipment only
**	Highline equipment only

ws	=	white
sw	=	black
ro	=	red
br	=	brown
gn	=	green
bl	=	blue
gr	=	grey
li	=	lilac
ge	=	yellow
or	=	orange
rs	=	pink

Protected by copyright. Copying for private or commercial purposes, in part or in whole, is not permitted unless authorised by AUDI AG. AUDI AG does not guarantee or accept any liability with respect to the correctness of information in this document. Copyright by AUDI AG.

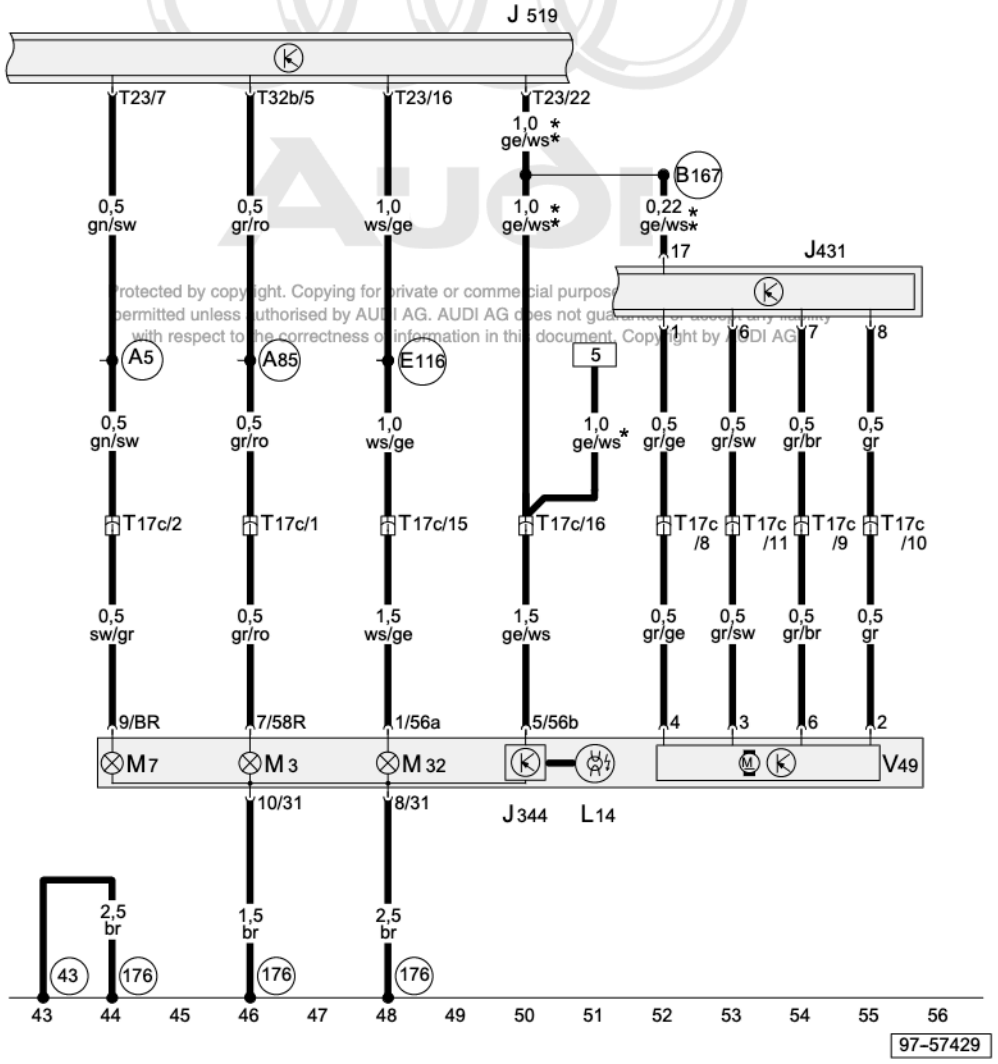

Protected by copyright. Copying for private or commercial purposes is not permitted unless authorised by AUDI AG. AUDI AG does not guarantee or accept any liability with respect to the correctness of information in this document. Copyright by AUDI AG

ws = white
sw = black
ro = red
br = brown
gn = green
bl = blue
gr = grey
li = lilac
ge = yellow
or = orange
rs = pink

Headlight Range Control Module, High intensity discharge lamp, Right Headlight Beam Adjusting Motor

J344	Control Module for High intensity gas discharge lamp
J431	Headlight Range Control Module
J519	Vehicle Electrical System Control Module
L14	High intensity discharge lamp
M3	Right Parking Light
M7	Right Front Turn Signal Light
M32	Right High Beam Headlight
T17c	17-Pin Connector, red, connector station A-pillar, right
T23	23-Pin Connector, black, on vehicle Electrical System Control Module
T32b	32-Pin Connector, grey, on vehicle Electrical System Control Module
V49	Right Headlight Beam Adjusting Motor
43	Ground connection, on right A-pillar, lower part
176	Ground connection, in right headlight wiring harness
A5	Plus connection (right turn signal), in instrument panel wiring harness
A85	Wire connection (58R), in instrument panel wiring harness
B167	Connection (56b) in passenger compartment wiring harness
E116	Connector (56a, right), in instrument panel wiring harness
*	Lowline equipment only
**	Highline equipment only